KALFIRE
FIREPLACES

W65-38CL

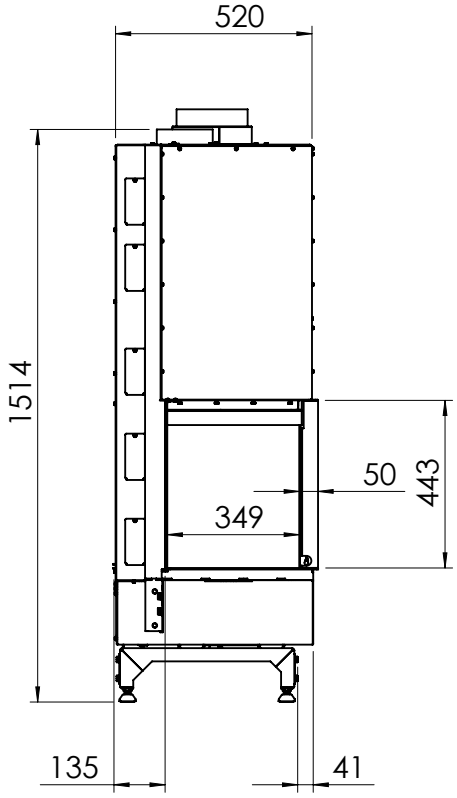

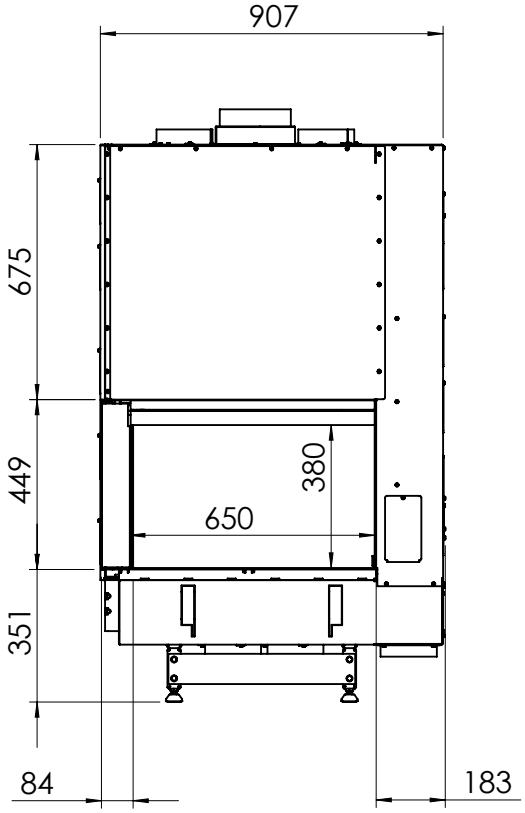

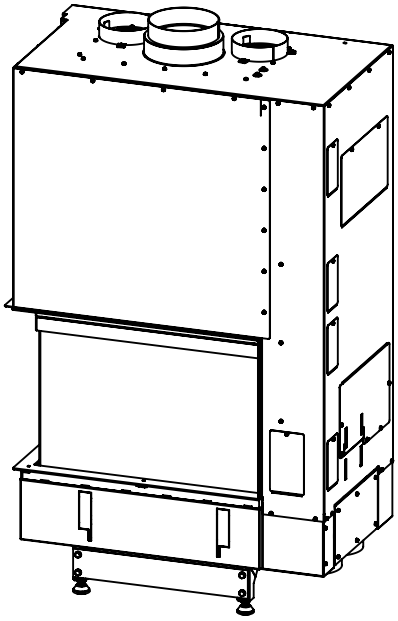

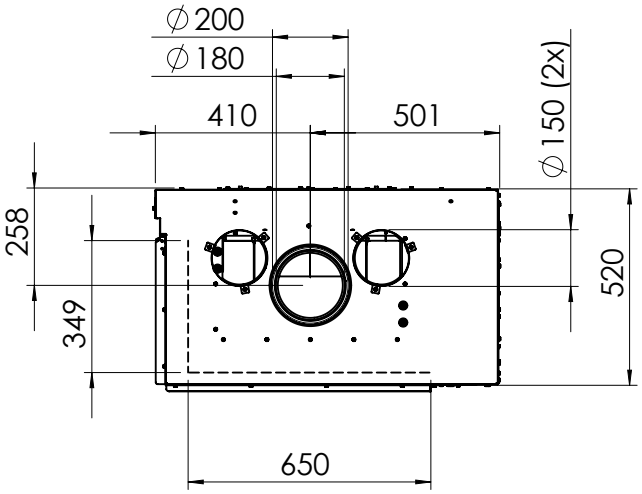

All dimensions in mm. Modifications under reserve.

21-4-2017 sheet 1 / 5

© All rights reserved. This drawing is sole property of Kal-fire. No part of this drawing may be reproduced, or published, in any form or in any way without prior written permission from Kal-fire.

KALFIRE
FIREPLACES

W65-38CL

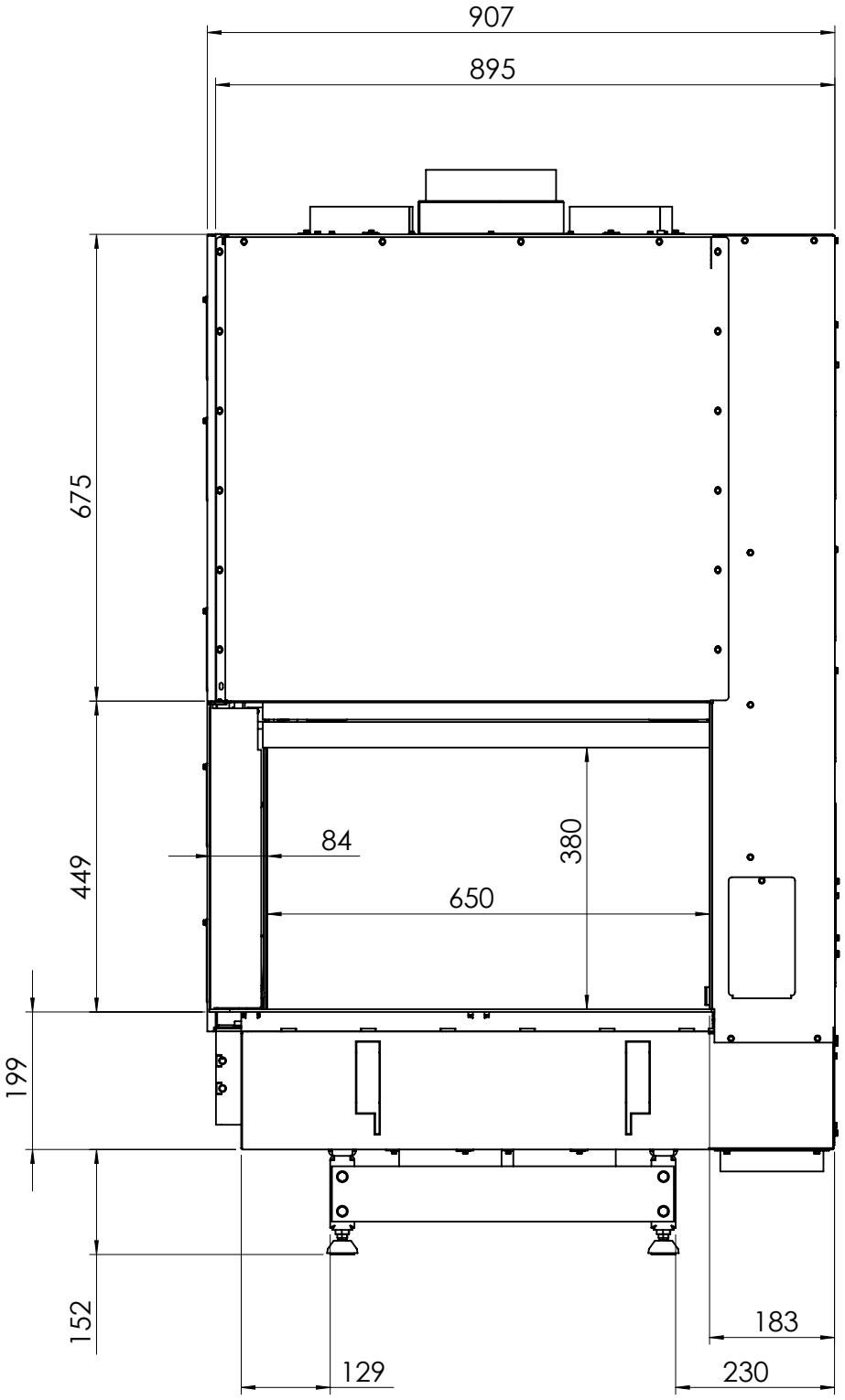

All dimensions in mm. Modifications under reserve.

21-4-2017 sheet 2 / 5

© All rights reserved. This drawing is sole property of Kal-fire. No part of this drawing may be reproduced, or published, in any form or in any way without prior written permission from Kal-fire.

KALFIRE
FIREPLACES

W65-38CL

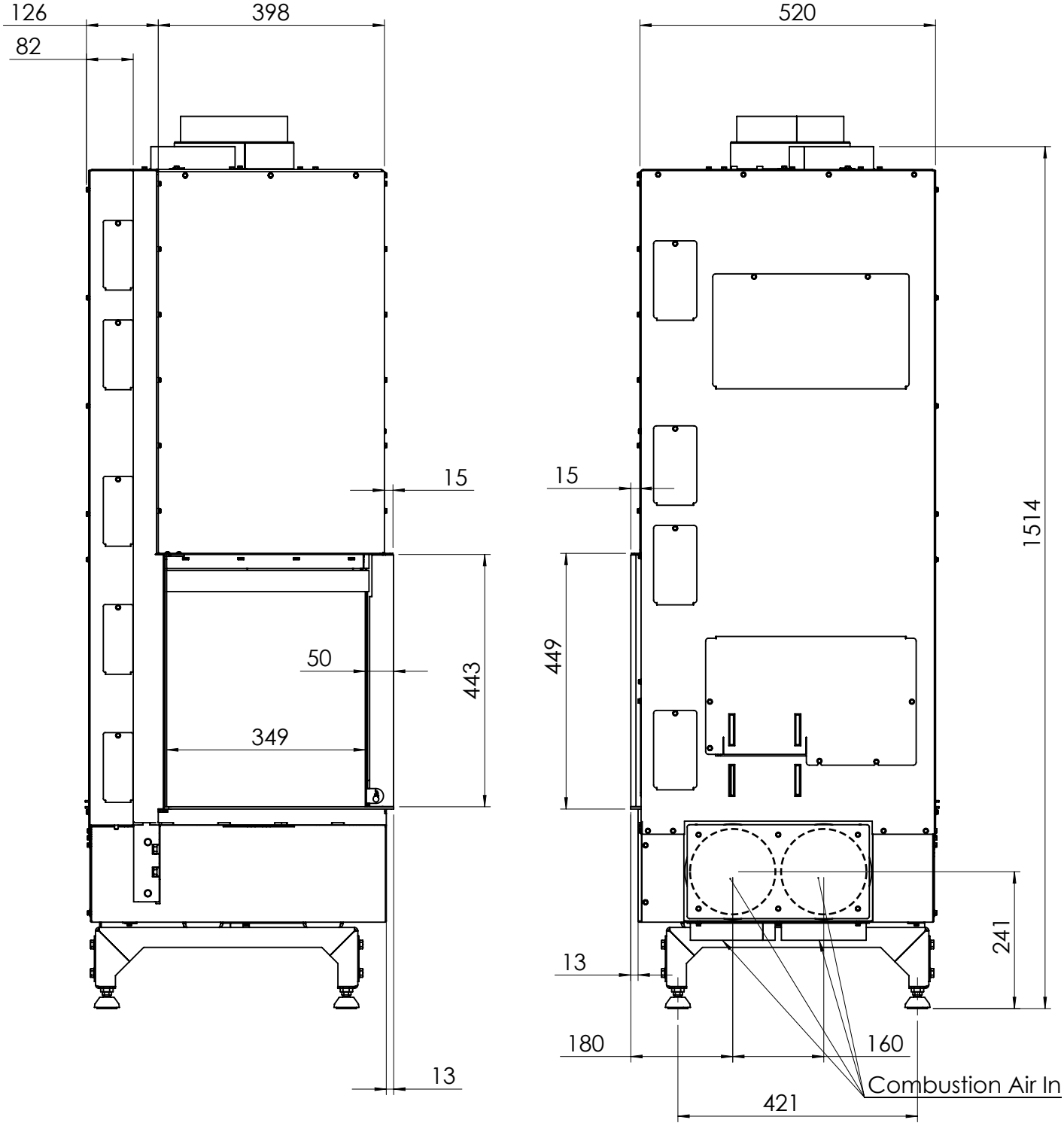

All dimensions in mm. Modifications under reserve.

21-4-2017 sheet 3 / 5

© All rights reserved. This drawing is sole property of Kal-fire. No part of this drawing may be reproduced, or published, in any form or in any way without prior written permission from Kal-fire.

KALFIRE
FIREPLACES

W65-38CL

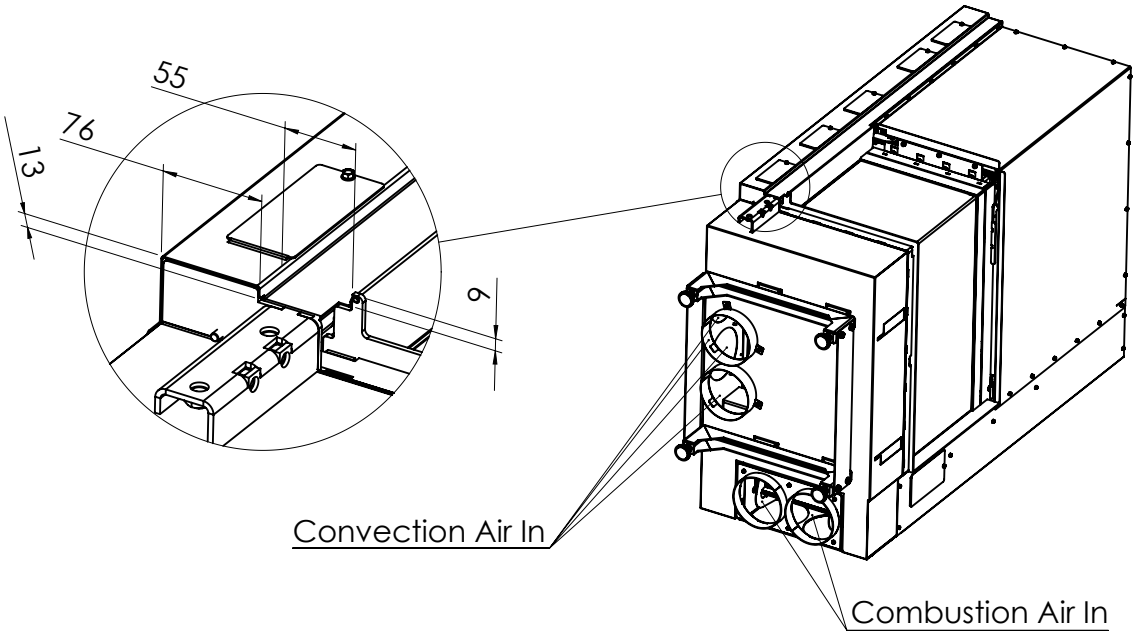

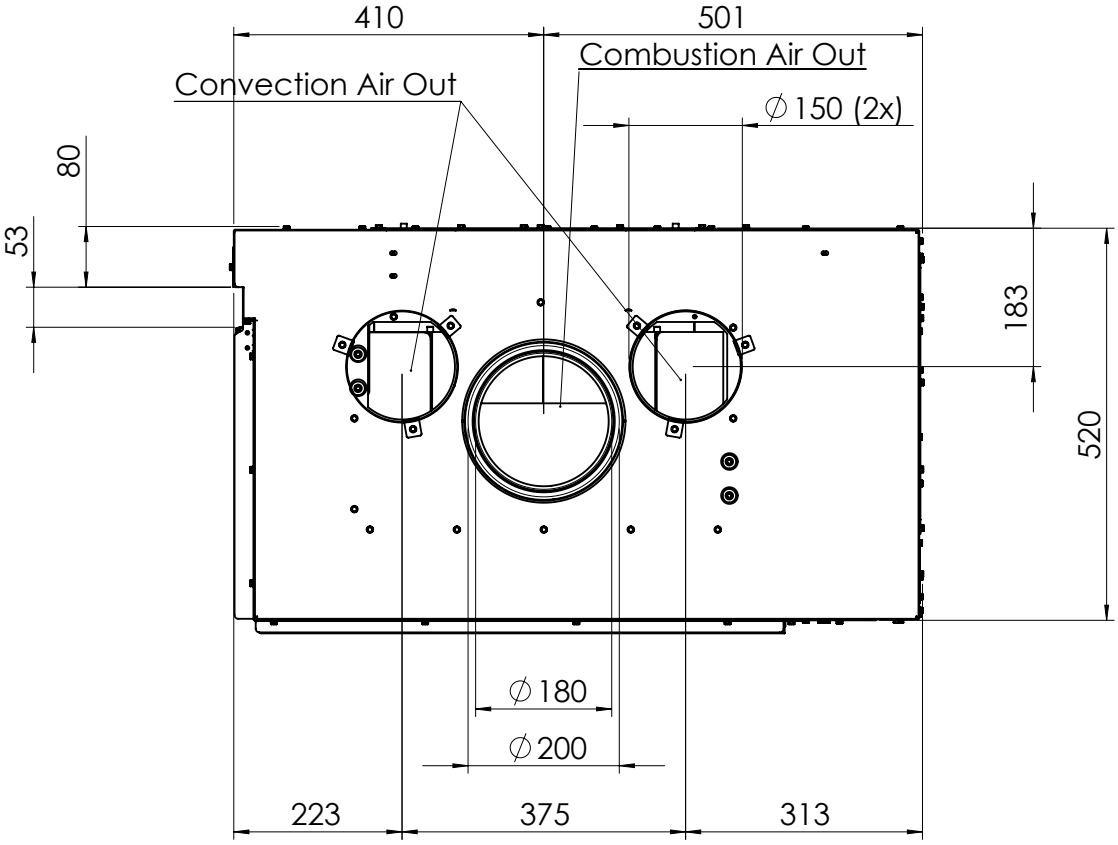

All dimensions in mm. Modifications under reserve.

21-4-2017 sheet 4 / 5

© All rights reserved. This drawing is sole property of Kal-fire. No part of this drawing may be reproduced, or published, in any form or in any way without prior written permission from Kal-fire.

KALFIRE
FIREPLACES

W65-38CL

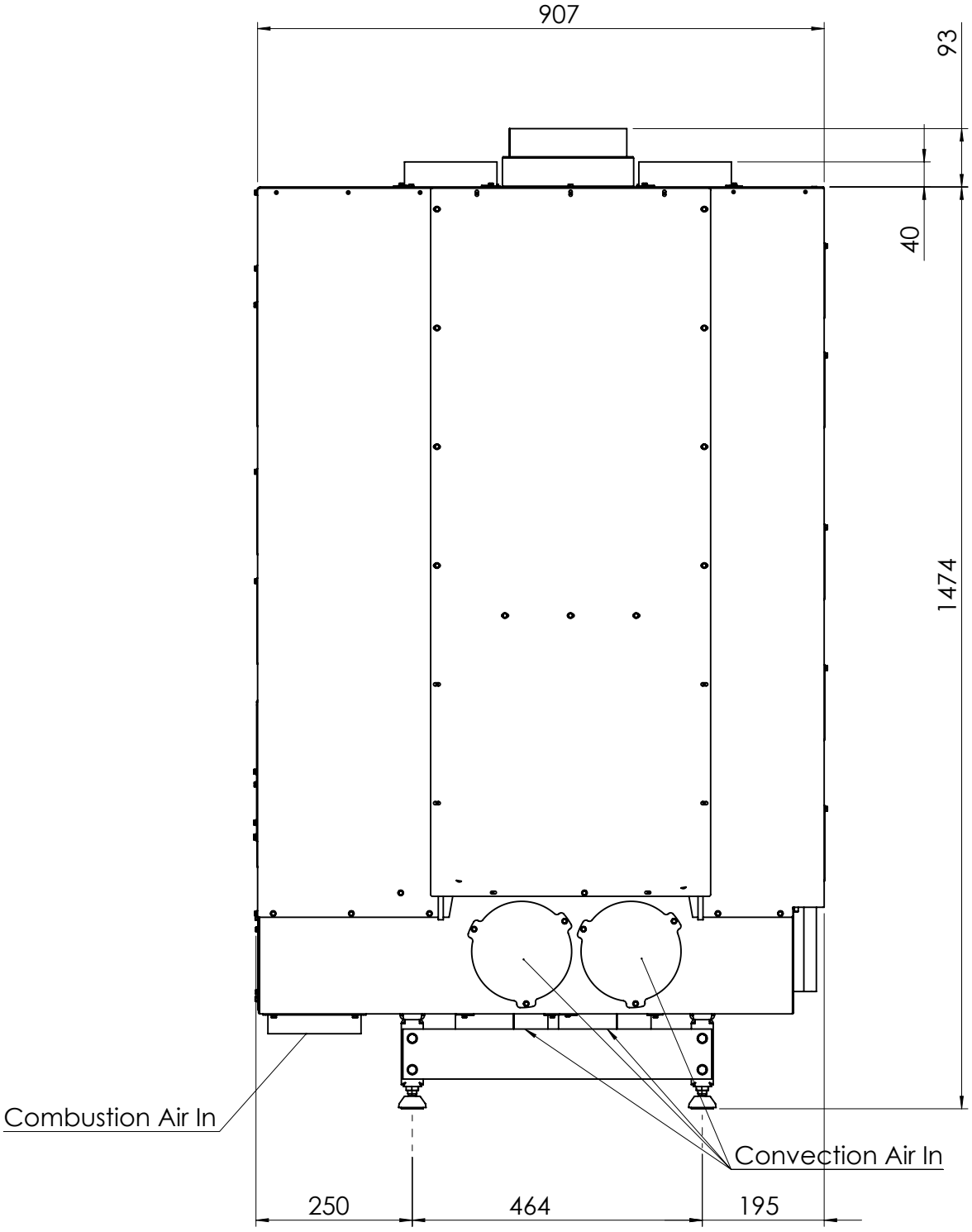

All dimensions in mm. Modifications under reserve.

21-4-2017 sheet 5 / 5

© All rights reserved. This drawing is sole property of Kal-fire. No part of this drawing may be reproduced, or published, in any form or in any way without prior written permission from Kal-fire.